# Submittal Cover Page

GRAND JUNCTION Winwater COMPANY

| | |
|---|---|
| **Submittal #** | Air Release Valve |
| **Submittal Revision #** | |
| **DATE** | 3/31/2026 |
| **Project Name** | |
| | East Cabins Irrigation Mainline |
| **PROJECT #** | |
| | 252128.ENV |

**TO:** Haynes Excavation

Double RL Ranch

**Summary**

| | |
|---|---|
| **ATTACHMENTS:** | Materials Technical Data Sheets |
| | |
| | |
| | |
| | |
| | |
| | |

| | |
|---|---|
| **SUBMITTED BY:** | Zach Lamont |
| | Grand Junction Winwater Company |

A.R.I.

# D-040 PN 16
# D-040-C PN 16

Water Supply

## Combination Air Valve

### Description

The D-040 series Combination Air Valve has the features of both an air release valve and an air & vacuum valve.
The air release component is designed to automatically release small pockets of air to the atmosphere as they accumulate along a pipeline or piping system when it is full and operating under pressure.
The air & vacuum component is designed to automatically discharge or admit large volumes of air during the filling or draining of a pipeline or piping system. This valve will open to relieve negative pressures whenever water column separation occurs.

### Applications

- Pump stations: after the pump and after the check valve.
- Downstream (after) and upstream (before) of shut-off valves.
- After deep-well pumps.
- On long constant-sloped pipeline segments.
- At peaks along the pipeline and at peaks relative to hydraulic gradient.
- At end lines.
- Before water meters.
- On strainers and filters.

**D-040-C - additional applications**

- Water pipelines vulnerable to vandalism and/or water theft.
- Water systems found in remote areas.

### Operation

The air & vacuum component, with the large orifice, discharges air at high flow rates during the filling of the system and admits air into the system at high flow rates during its drainage and at water column separation.
High velocity air will not blow the float shut. Water will lift the float, which seals the valve.
At any time during system operation, should internal pressure of the system fall below atmospheric pressure, air will enter the system.
The smooth discharge of air reduces pressure surges and other destructive phenomena.
The intake of air in response to negative pressure protects the system from destructive vacuum conditions and prevents damage caused by water column separation. Air entry is essential to efficiently drain the system.
The air release component releases entrapped air in pressurized systems.

**Without air valves, pockets of accumulated air may cause the following hydraulic disturbances:**

- Restriction of effective flow due to a throttling effect as would a partially closed valve. In extreme cases this will cause complete flow stoppage.
- Obstruction of efficient hydraulic transmission due to air flow disturbances.
- Accelerate cavitation damages.
- Pressure transients and surges.
- Corrosion in pipes, fittings and accessories.
- Danger of a high-energy burst of compressed air.
- Inaccuracies in flow metering.

**As the system starts to fill, the valve functions according to the following stages:**

1. Entrapped air in the pipeline is discharged by the valve.
2. Liquid enters the valve, lifting the float which pushes the sealing mechanism to its sealing position.
3. Entrapped air, which accumulates at peaks and along the system, rises to the top of the valve, which in turn displaces the liquid in the valve's body.
4. The float descends, unsealing the rolling seal. The air release orifice opens and the accumulated air is released.
5. Liquid enters the valve and the float rises, pushing the rolling seal back to its sealing position.

**When internal pressure falls below atmospheric pressure (negative pressure):**

1. The float will immediately drop down, opening the air & vacuum and air release orifices.
2. Air will enter the system.

### Main Features

- Working pressure range: 0.2 - 16 bar
- Testing pressure: 25 bar.
- Maximum working temperature: 60° C.
- Maximum intermittent temperature: 90° C.
- Reliable operation reduces water hammer incidents.
- Dynamic design allows for high velocity air discharge while preventing premature closure.
- Lightweight, small dimensions, simple and reliable structure.
- The drainage outlet enables removal of excess fluids.
- The large size of the automatic air release orifice relative to the air valve body:
  - Discharges air at high flow rates.
  - Lessens the danger of its obstruction by debris.
  - Enables the usage of the patented rolling seal mechanism, making it less sensitive to pressure differential than a direct float seal.
- The body is made of high-strength composite materials and all

operating parts are made of specially selected, corrosion- resistant materials.
- Due to its light weight, the valve may be installed on plastic piping systems, as well as other lightweight piping systems.
- D-040-C the body is protected in a metal shell for anti-vandalism/ theft applications.

## Valve Selection

The air valve is available with:
- Wide size range: 1/2”, 3/4”, 1”, 2” threaded male connections, NPT or BSPT.
- Optional ball valve tap; BSPT or NPT male connection.

## Options

- The D-040 air valve is available in the following options:
• D-040 1” & 2” - reinforced nylon body and base.
• D-040 B 1” & 2” -reinforced nylon body and brass base.
• D-040 C 1” & 2” - cast iron shell and base (1” base - brass)
• D-040 ST. - reinforced nylon body and stainless steel base.
• D-040 ST ST - stainless steel body and stainless steel base.
- The D-040 LP air valve is made for very low pressure systems with a maximum working pressure of PN 6.
- The DG-10 air valve is made for low pressure systems with a maximum working pressure of PN10.

**Upon ordering, please specify: model, size, working pressure, threads standard and type of liquid.**

# D-040

A.R.I.

## AIR AND VACUUM FLOW RATE

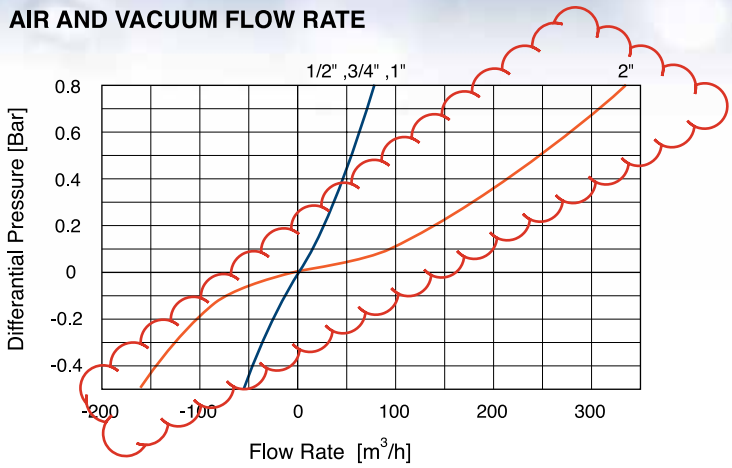


## AUTOMATIC AIR RELEASE FLOW RATE

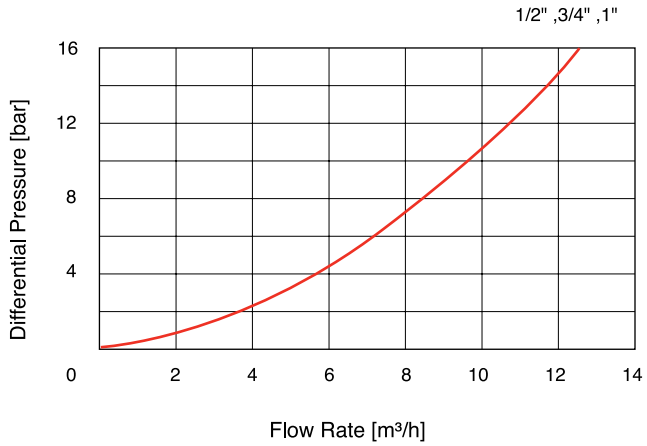


## AUTOMATIC AIR RELEASE FLOW RATE

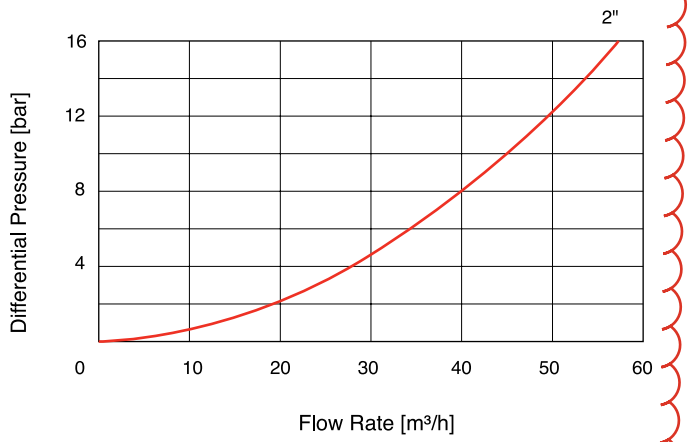


**A.R.I. FLOW CONTROL ACCESSORIES Ltd. www.arivalves.com ari@ari.co.il Tel: 972-4-6761988**

A.R.I. FLOW CONTROL ACCESSORIES Ltd. reserves the right to make product changes without prior notice. To insure receiving updated information on parts specifications, please call the export dept. at the A.R.I. factory. A.R.I. FLOW CONTROL ACCESSORIES Ltd. shall not be held liable for any errors. All rights reserved.

# 101S & 202S
# SERVICE SADDLES

## SUBMITTAL INFORMATION

101S 202S

## MATERIALS

**CASTING**
The saddle body is cast from ductile (nodular) iron, meeting or exceeding ASTM A 536, Grade 65-45-12.

**GASKET**
Gasket is made from Nitrile Butadiene Rubber (NBR) compounded for water and sewer service and a tolerance of petroleum products in accordance with ASTM D 2000 MBC 610 and NSF 61 Certified. Other compounds available for special applications.

**STRAPS**
Type 304 (18-8) heavy gauge Stainless Steel per ASTM A 240. Straps are two inches wide to spread out clamping forces on the pipe. GMAW and GTAW welds. Passivated for corrosion resistance.

**BOLTS, NUTS**
For sizes 1-1/2" through 3", 1/2" UNC roll thread Type 304 (18-8) Stainless Steel bolts with heavy hex nuts. 4" and above use 5/8" UNC roll thread Type 304 (18-8) Stainless Steel bolts with heavy hex nuts. Rod for bolts are per ASTM A 240 and nuts are per ASTM A 194. All welds fully passivated for enhanced corrosion resistance. Nuts coated to prevent galling.

**WASHERS**
Flat, type 304 (18-8) heavy gauge Stainless Steel.

**COATINGS**
Shop coat applied to cast parts for corrosion protection in transit.

## PRESSURE

Ductile iron, cast iron and steel pipe: rating of pipe up to 350 psi maximum, on pipe sizes up through 24 inch, larger than 24 inch up to 30 inch pressure rating is 150 psi. PVC, asbestos cement and other pipe: up to the maximum rating of the pipe. For other applications please consult your representative.

## STANDARD

These service saddles meet the requirements of ANSI/AWWA C800, Underground Service Line Valves and Fittings.

## SIZES & RANGES

See catalog, sizes up through 32.10.

10/17
Document # 25-8-0002

*This information is based on the best data available at the date printed above. Please check with Romac for any updates or changes.*

ROMAC INDUSTRIES, INC.
www.romac.com
21919 20th Avenue SE • Suite 100 • Bothell, WA 98021
Phone (425) 951-6200 • 1-800-426-9341 • Fax (425) 951-6201

# DOUBLE STRAP SERVICE SADDLES

MADE IN U.S.A.

ROMAC INDUSTRIES, INC.

**STYLE 202S**
PAINTED SADDLE WITH STAINLESS STEEL STRAPS

NSF
Certified to NSF/ANSI 61 & 372

**STYLE 202NS**
NYLON COATED SADDLE WITH STAINLESS STEEL STRAPS

| NOM. PIPE SIZE | O.D. SIZE RANGE | ½" I.P., ¾" & 1" I.P. OR C.C. TAP | | | 1¼" - 1½" - 2" I.P., OR C.C. TAP (2½" I.P. ONLY) | | | |
|---|---|---|---|---|---|---|---|---|
| | | 202S | 202NS | CTN QTY | 202S | 202NS | CTN QTY | APPROX. WEIGHT EA. (lbs.) |
| 2" | 2.38 - 2.50 [1] | $167.12 | $205.16 | 10 | $181.25 [1] | $224.92 [1] | 10 | 3.5 # |
| 3" | 3.50 | 167.43 | 206.96 | 8 | 192.36 | 225.36 | 8 | 5.0 # |
| | 3.45 - 4.05 [2, 3] | 167.43 | 206.96 | 8 | 192.36 | 225.36 | 8 | 5.0 # |
| 4" | 4.00 - 4.50 | 168.53 | 206.96 | 5 | 192.36 | 225.36 | 5 | 7.5 # |
| | 4.50 - 4.80 | 168.53 | 206.96 | 5 | 192.36 | 225.36 | 5 | 7.5 # |
| | 4.50 - 5.40 [4] | 170.11 | 206.96 | 5 | 192.36 | 225.36 | 5 | 7.5 # |
| 6" | 6.00 - 6.63 | 189.71 | 237.76 | 6 | 213.75 | 258.26 | 6 | 9.0 # |
| | 6.63 - 6.90 | 189.71 | 237.76 | 6 | 213.75 | 258.26 | 6 | 9.0 # |
| | 6.63 - 7.60 [4] | 189.71 | 237.76 | 6 | 213.75 | 258.26 | 6 | 9.0 # |
| 8" | 8.00 - 8.63 | 230.14 | 276.54 | 4 | 264.88 | 294.75 | 4 | 10.0 # |
| | 8.63 - 9.05 | 230.14 | 276.54 | 4 | 264.88 | 294.75 | 4 | 10.0 # |
| | 8.63 - 9.80 [4] | 238.19 | 276.54 | 4 | 264.88 | 294.75 | 4 | 10.0 # |
| 10" | 10.00 - 11.10 | 279.59 | 333.92 | 4 | 319.76 | 359.91 | 4 | 11.5 # |
| | 11.10 -12.12 [4] | 279.59 | 333.92 | 4 | 319.76 | 359.91 | 4 | 11.5 # |
| 12" | 12.00 - 13.20 | 324.14 | 388.69 | 4 | 370.43 | 416.28 | 4 | 12.5 # |
| | 13.20 -14.38 [4] | 324.14 | 388.69 | 3 | 370.43 | 416.28 | 3 | 12.5 # |
| 14" | 15.30 - 16.80 | 387.90 | 452.98 | 4 | 392.42 | 482.52 | 4 | 15.3 # |
| 16" | 17.40 - 18.90 | 395.20 | 532.63 | 3 | 443.67 | 569.33 | 3 | 16.0 # |
| 18" | 19.50 - 21.10 | 607.69 | 742.19 | 3 | 644.14 | 779.24 | 3 | 18.0 # |
| 20" | 21.10 - 22.70 | 680.47 | 830.84 | 3 | 721.46 | 872.71 | 3 | 20.0 # |
| 22" | 22.70 - 24.30 | 714.55 | 872.86 | 3 | 757.39 | 916.37 | 3 | 21.0 # |
| 24" | 24.30 - 25.90 | 800.38 | 977.62 | 3 | 848.32 | 1,026.29 | 3 | 23.0 # |
| 26" | 25.70 - 27.30 | 808.37 | 985.63 | 3 | 856.33 | 1,034.33 | 3 | 24.0 # |
| 28" | 27.30 - 28.90 | 816.40 | 993.62 | 3 | 864.33 | 1,042.34 | 3 | 24.5 # |
| 30" | 28.90 - 30.50 | 824.41 | 1,001.65 | 3 | 872.33 | 1,050.33 | 3 | 25.0 # |
| | 30.50 - 32.10 | 832.40 | 1,009.66 | 3 | 880.35 | 1,058.36 | 3 | 26.0 # |

Prices and weights shown are per saddle.
[1] 202 - 2.50 can accommodate up to 1½" I.P. and C.C.
[2] 202 for 4.05" can accommodate up to 2" IP and 1½" C.C.
[3] Not recommended for iron pipe size PVC
[4] Not recommended for PVC pipe.

**Manufacturer Recommendations:**
For PVC applications select the saddle with the top of range number that is closest to the diameter of the pipe.

**FOR COPPER PIPE** Romac recommends single strap saddles which should be preformed at the factory, or see 304/306 stainless steel saddles.

**TO ORDER:** Add tap size to the upper range of the saddle.

| | STYLE | | UPPER RANGE | | TAP SIZE | TYPE THREAD |
|---|---|---|---|---|---|---|
| **EXAMPLE:** Painted Saddle with Stainless Strap: | **202S** | – | **7.60** | x | **3/4"** | **IP** |
| Nylon Saddle with Stainless Steel strap: | **202NS** | – | **7.60** | x | **3/4"** | **IP** |





Manufactured with Domestic and Import material. For Domestic requirements please contact our Quotations Department.
JANUARY 10, 2022

# SUBMITTAL DATA SHEET

No-Lead Ball Valves
Full Port Ball Valve - 72032T

FNPT x FNPT

A.Y. McDonald Mfg. Co. No-Lead Ball Valves are constructed from heavy duty no-lead brass and can be used with a full range of liquids and gases in commercial, industrial, and residential applications. Full port valves allow for maximum flow with minimum pressure drop.

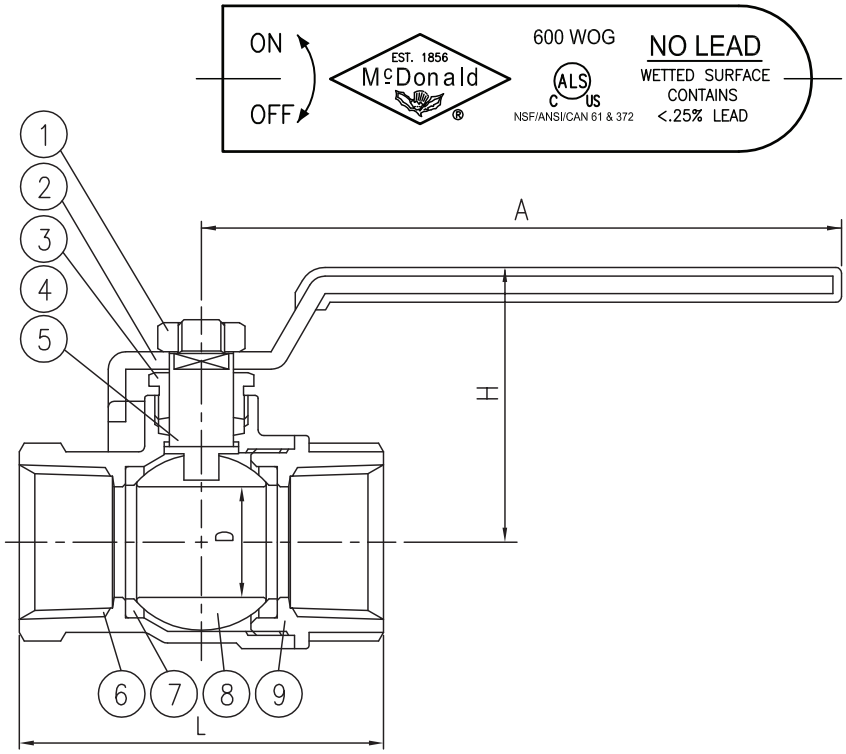


## Dimensions

| Part No. | Model No. | Size | L | H | D | A |
|---|---|---|---|---|---|---|
| 5420-006 | 72032T | 1/4" | 1.69 | 1.26 | .35 | 2.36 |
| 5420-007 | 72032T | 3/8" | 1.81 | 1.46 | .39 | 3.15 |
| 5420-150 | 72032T | 1/2" | 2.13 | 1.50 | .50 | 3.15 |
| 5420-151 | 72032T | 3/4" | 2.48 | 1.85 | .75 | 4.33 |
| 5420-152 | 72032T | 1" | 2.99 | 2.05 | .98 | 4.33 |
| 5421-115 | 72032T | 1 1/4" | 3.35 | 2.36 | 1.26 | 5.12 |
| 5421-116 | 72032T | 1 1/2" | 3.62 | 2.56 | 1.50 | 5.12 |
| 5421-117 | 72032T | 2" | 4.25 | 3.11 | 1.97 | 7.87 |
| 5420-018 | 72032T | 2 1/2" | 5.16 | 3.50 | 2.48 | 7.87 |
| 5420-019 | 72032T | 3" | 5.91 | 3.82 | 2.95 | 7.87 |

## Materials

| No. | Part | Material |
|---|---|---|
| 1 | Nut | Steel |
| 2 | Handle | Steel |
| 3 | Stem Gland Screw | Brass |
| 4 | Stem Packing | Teflon |
| 5 | Stem | Brass |
| 6 | Body | No-Lead Brass (C46400) |
| 7 | Ball Disc Packing | Teflon |
| 8 | Ball | No-Lead Brass - Chrome Plated |
| 9 | End piece | No-Lead Brass |

## SUBMITTAL INFORMATION

- 600 WOG, 150 WSP
- Max working temperature is 250ºF
- Blow out proof stem
- Manufactured to MSS-SP-110
- Threads conform to ANSI B1.20.1
- CSA approved 1/2" - 2" - B16.44 5 PSIG

UL Certified 1/4" - 2"

FM APPROVED

ALS C US

NSF/ANSI/CAN 61 & 372

CSA C US

NO-LEAD: The weighted average of the wetted surface of this no-lead product contacted by consumable water contains less than one quarter of one percent (0.25%) lead.


**A.Y. McDonald Mfg. Co.**
4800 Chavenelle Rd
Dubuque, IA 52002

**Toll Free:** 1-800-292-2737
sales@aymcdonald.com
aymcdonald.com



A.Y. McDonald considers the information on this assembly drawing correct when published. Item and option availability, including specifications, are subject to change without notice.


**Submitted by:**

# Steel Nipples and Brass Nipples

SMITH-COOPER®
INTERNATIONAL

# Steel Nipples and Brass Nipples

## Welded Sch 40 & Sch 80 Specifications

- SCI branded
- Black and hot-dipped galvanized steel pipe used conforms to ASTM A53
- Welded steel nipples conform to ASTM A733
- NPT threads on nipples conform to ASME B1.20.1
- Manufacturing facility is ISO 9001:2008 and ISO 14001
- Import nipples have SCI Trademark and tracking number
- Domestic nipples available upon request
- Galvanized nipples are certified to; NSF/ANSI 61-4 and California AB1953 Lead Free

## Seamless Sch 40, Sch 80, and XXH Specifications

- SCI branded
- Seamless steel pipe used conforms to ASTM A106 Grade B
- Seamless steel nipples conform to ASTM A733
- NPT threads on nipples conform to ASME B1.20.1
- Manufacturing facility is ISO 9001:2008 and ISO 14001
- Import nipples have SCI trademark and heat number
- Domestic nipples available upon request

## Seamless Sch 40 Red Brass Specifications

- SCI Branded
- Seamless brass pipe conforms to ASTM B43
- Seamless brass nipples conform to ASTM B687
- NPT threads on nipples conform to ASME B1.20.1
- Certified to CA AB1953 Lead Free

* Special ends finishes and lengths available upon request